The “Ambiguous” Problem we may have met when study “The Flip-Flop” between the Theory and Intuition

HarryHoang_University of Information Technology

25520624@gm.uit.edu.vn

The Flip-Flop is a Latch?

When studying about The Flip-Flop, there has a lot of problems also the question that we need to clarify. The first thing we should "feel" when studying Flip-Flops is their **inheritance** from the Latch.

Do you notice that when we study about the latch D with c input (control) or latch S-R with c input (control), the circuit only activates if c = 1 (meaning that we are only allowed to change the ouput value depend on S-R or D when the control signal is high)

However, when we move to Flip-Flops, c transforms into the **Clock (CLK)**. The activation now depends on whether the clock is **High-active**, **Low-active**, or **Edge-triggered**. In practical work, "Low-active" (Negative Edge) is very popular and convenient

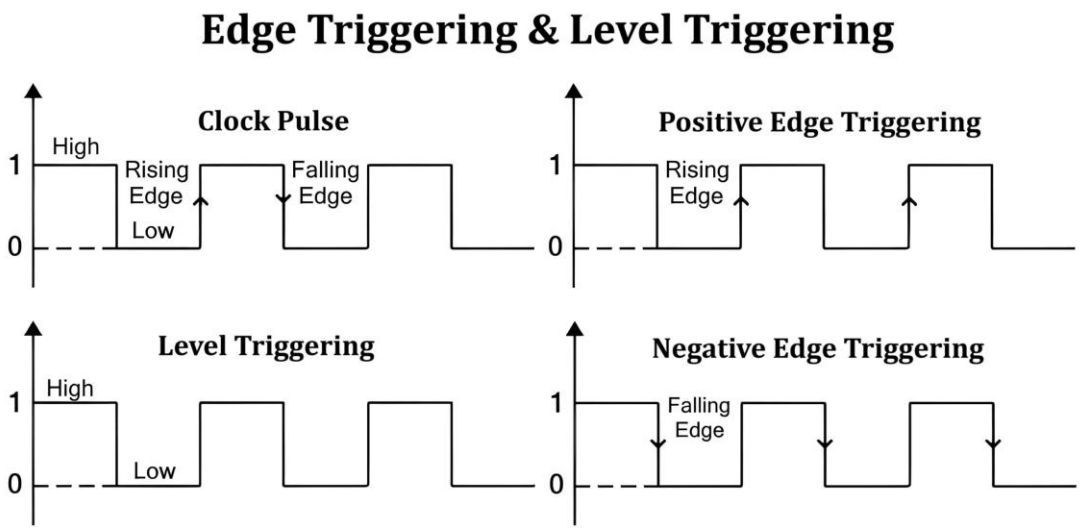

Crucial Note: Always pay attention to when the clock activates (the moment control = 1 or the trigger edge occurs). That is exactly when the changes in Q and Q’ begin. **Remember it!**

Don’t worry about this, this is only change the way we interact with the clock, the example, if the clock is high, it changes but if the clock is low, it also changes.

- The importance here I want to say that, we should notice to when the clock is activation (the CONTROL = 1), the changes of the Q and Q' will starts. Remember it!!

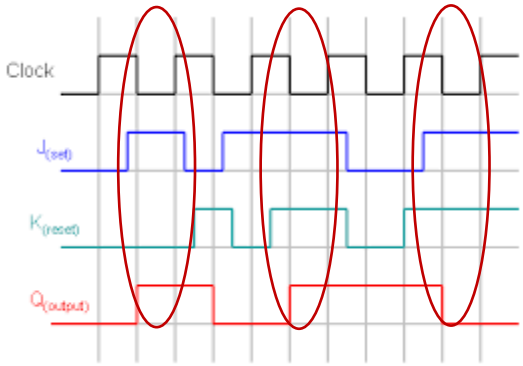

Here is an example, we don't known this is the rising ede or low edge, but we can notice to that the Q(output) is often "change" after the Clock become high to low (low edge), and we also notice in the first circle, ONLY when clock change, the output become "change", it is meaning that The Flip-Flop have the originatily that "from the Latch" but the update version.

Deciphering the Symbols: Edge vs. Level Triggering

So, how we detect it when do the assignment or in the test? The best advice is to stay calm and look closely at the symbols.

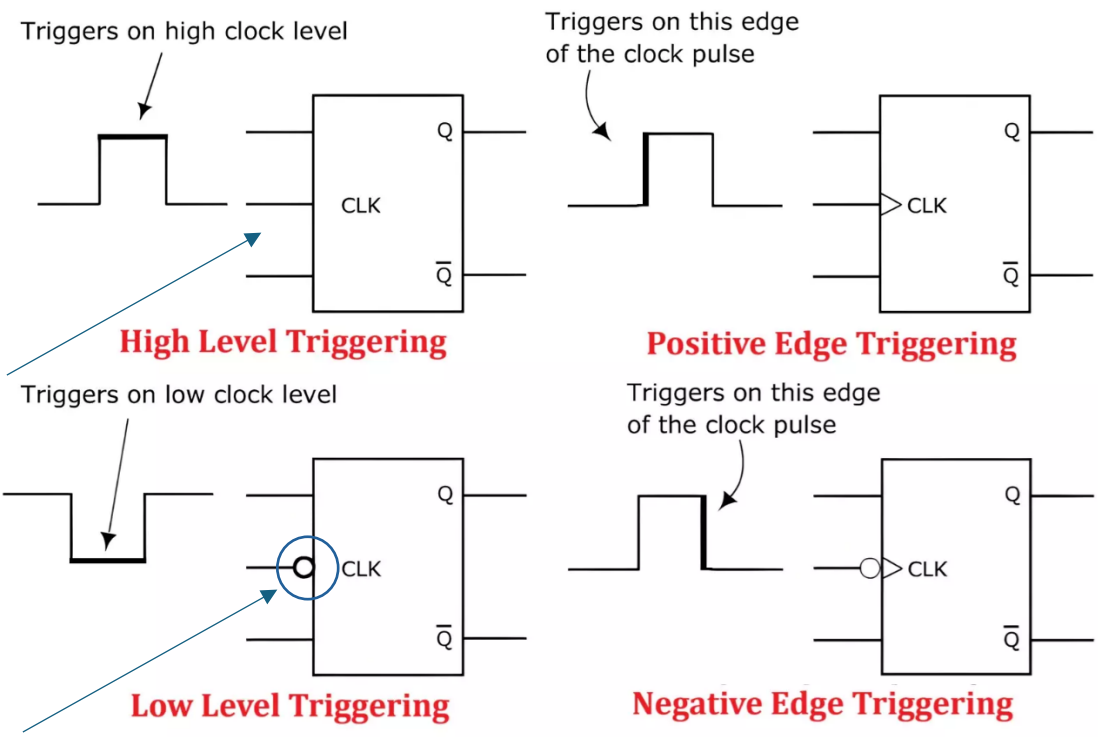

The Sign here is we look at the small circle in front of the Clock symbols:, the "small circle" we can image that, it is a "Not gate", Let's have an example:

- When low edge: The clock activates when it receives 0, (0 not → 1 (Activation))
  If it receives 1, it not activates (1 not → 0 (Not activation))

Asynchronous counters and Synchronous counters with Clock

In textbooks and slides, we often see Negative Edge triggering used, the reason here is some IC like 74LS76, 74S107 is often designd for "negative edge", so we often use it in the textbooks and slides, but does this change the principles when we study about the Asynchronous counters?, The answer is no, but we must undestand the priciples of its activation.

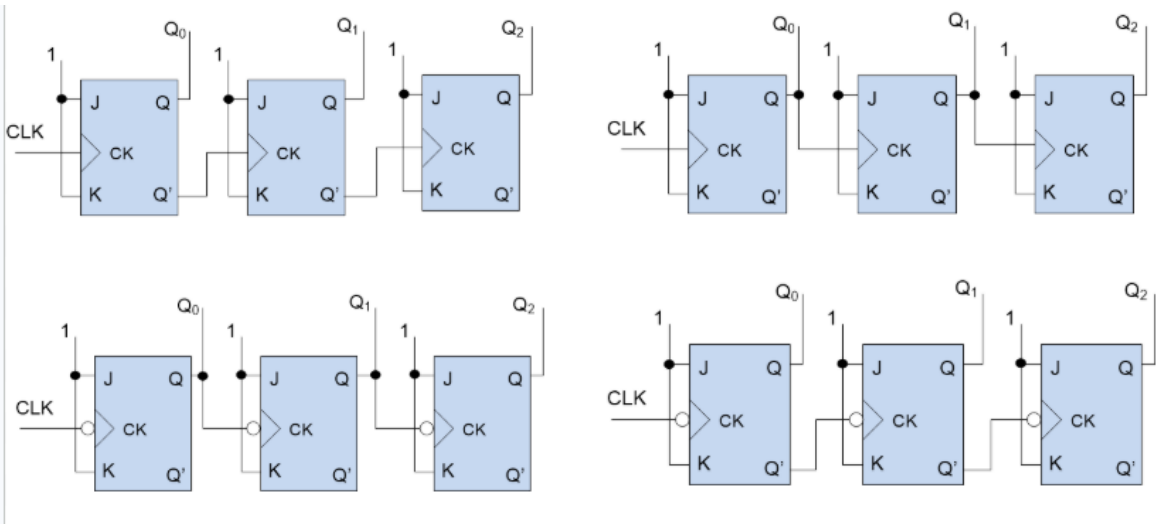

Up counters

Low counters

The "Pro - tips" here for you to remember is :

- Up counters when " **Q not Clock** ". Example: in the Figure1 (high edge), Q' connect to Clk (meaning Q not Clock) or the Figure 3(low edge), Q connect to not Clk (meaning Q not Clock)
- Down counters when " **Q Clock or Q not not Clock** ". Example: in the Figure 2 (high edge), Q connect to Clk (Q Clock) or in the Figure 4 (low edge): Q' connect to not Clock (meaning Q not not Clock).

Now, Let's Forget the Tips and Look at the Logic:

- **Up counters Example**: we have 00 and we want to count to 01 (up), if we use the high clock (Q' to Clk), he flow is : when Clk changes (receives 1 is the input), J,K = 1 → Q change (0→1) and Q' change (1 → 0), the value 0 will go to the Clk of next FF but the Clk is high edge so it stops, (meaning we only counts 00 → 01)
  Second: if we use low clock (Q to not Clock), the flow is: when Clk changes (receives 0 is the input → not →1), J,K = 1 → Q change (0 → 1), the value 1 will go to the Clk of next FF but the Clk is low edge so it stops (meaning we also counts 00 → 01).

- **Down counters Example:** we have 11 and we want to count to 10 (down), if we use the high clock (Q to Clk), the flow is : when Clk 1st changes (receives 1 is the input), J,K = 1 → Q change (1→0) and Q' change (0 → 1), the value 0 (from Q) will go to the Clk of next FF but the Clk is high edge so it stops (meaning we also counts 11 → 10).
  Second: if we use low clock (Q' to not Clock), the flow is: when Clk changes (receives 0 is the input → not →1), J,K = 1 → Q change (1→0) and Q' change (0 → 1), the value 1 will go to the Clk of next FF but the Clk is low edge so it stops (meaning we also counts 11 → 10).

Conclusion:

Logic shouldn't be "ambiguous" .We should follows a clear and logic flow.

- Bonus: The number of Flip_flop determines your binary bit count, example: with 3 Flipflop, we can count xxx possiblestatement (x = 0 or 1), so the number of states we can count is 2*2*2 = 8 (from 000 to 111)

This knowledge is accumulated from my own experience and the excellent lecture slides from the **Faculty of Computer Engineering at UIT**. I hope this helps you on your own engineering journey!